# CANELA

# Railroad TOOLING

# INDEX

Inserts ..... 02

TS ..... 04

PSC ..... 10

Turning ..... 16

Re-Turning ..... 20

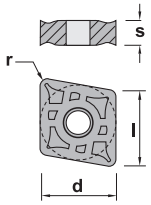


Usage: Railway and general duty.

## CNMG-CR

| | l | s | d | r |
|---|---|---|---|---|
| **CNMG 160608-CR** | 16,10 | 6,35 | 15,88 | 0,8 |
| **CNMG 160612-CR** | 16,10 | 6,35 | 15,88 | 1,2 |
| **CNMG 190612-CR** | 19,30 | 6,35 | 19,05 | 1,2 |
| **CNMG 190616-CR** | 19,30 | 6,35 | 19,05 | 1,6 |

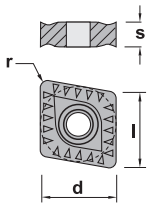


Usage: Railway and general duty.

## CNMM

| | l | s | d | r |
|---|---|---|---|---|
| **CNMM 160612** | 16,10 | 6,35 | 15,88 | 1,2 |
| **CNMM 190612** | 19,30 | 6,35 | 19,05 | 1,2 |

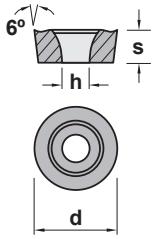


Usage: Railway and general duty.

## RCMT

| | d | s | h |
|---|---|---|---|
| **RCMT 2006M0A-3G** | 20,0 | 6,35 | 6,50 |
| **RCMT 2507MOS** | 25,4 | 7,93 | 7,18 |
| **RCMT 3209MOS** | 32,0 | 9,53 | 8,61 |

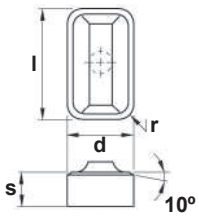


Usage: Railway.

## RRC

| | d | l | s | r |
|---|---|---|---|---|
| **RRC-65612R** | 19,05 | 31,75 | 9,52 | 4,75 |
| **RRC-65612T** | 19,05 | 31,75 | 9,53 | 4,75 |

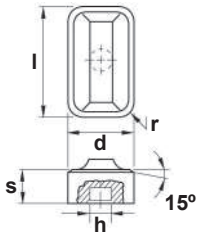


Usage: Railway.

## RRCH

| | d | l | s | r | h |
|---|---|---|---|---|---|
| **RRCH65812-T15** | 19,05 | 31,75 | 12,70 | 4,75 | 8,25 |

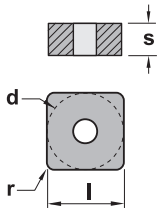


Usage: Railway and general duty.

## SNMA

| | l | s | d | r |
|---|---|---|---|---|
| **SNMA 190612** | 19,05 | 6,35 | 19,05 | 1,2 |
| **SNMA 190616** | 19,05 | 6,35 | 19,05 | 1,6 |

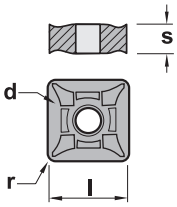


Usage: Railway and general duty.

## SNMG-CR

| | l | s | d | r |
|---|---|---|---|---|
| **SNMG 190616-CR** | 19,05 | 6,35 | 19,05 | 1,6 |
| **SNMG 250724-CR** | 25,40 | 7,94 | 25,40 | 2,4 |

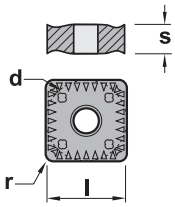


Usage: Railway and general duty.

## SNMM

| | l | s | d | r |
|---|---|---|---|---|
| **SNMM 190612** | 19,05 | 6,35 | 19,05 | 1,2 |
| **SNMM 190616** | 19,05 | 6,35 | 19,05 | 1,6 |
| **SNMM 250724** | 25,40 | 7,94 | 25,40 | 2,4 |

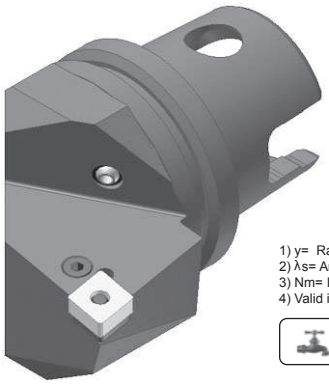

1) y= Rake angle (valid a smooth insert).
2) λs= Angle of inclination.
3) Nm= Insert moment of force.
4) Valid in combination with the fixing unit R/LC2090.

**Characteristics:**
TS with internal coolant.

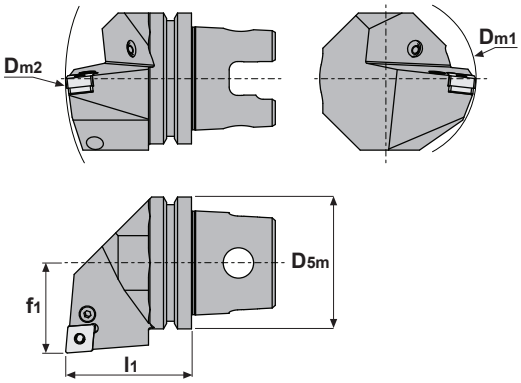


| PCLN | D5m | Dm1 min.4) | Dm2 min.4) | f1 | l1 | y1) | λs2) | Nm3) | Insert |
|---|---|---|---|---|---|---|---|---|---|
| TS63-PCLNR/L16 | 63 | 80 | 190 | 43 | 60 | -6º | -6º | 6.4 | CN.. 1606.. |
| TS80-PCLNR/L16 | 80 | 106 | 250 | 53 | 70 | -6º | -6º | 6.4 | CN.. 1606.. |
| | | | | | | | | | |
| TS63-PCLNR/L19 | 63 | 80 | 190 | 43 | 60 | -6º | -6º | 6.4 | CN.. 1906.. |
| TS80-PCLNR/L19 | 80 | 106 | 250 | 53 | 70 | -6º | -6º | 6.4 | CN.. 1906.. |
| | | | | | | | | | |
| TS80-PCLNR/L25 | 80 | 106 | 250 | 53 | 70 | -6º | -6º | 9.5 | CN.. 2509.. |
| TS100-PCLNR/L25 | 100 | 116 | 300 | 63 | 90 | -6º | -6º | 9.5 | CN.. 2509.. |

| | | | | | | |
|---|---|---|---|---|---|---|
| TS63-PCLNR/L16 | 8016 | 1618 | 5003 | 3616 | 4115 | 0015 |
| TS80-PCLNR/L16 | 8016 | 1618 | 5003 | 3616 | 4115 | 0015 |
| | | | | | | |
| TS63-PCLNR/L19 | 8019 | 1610 | 5004 | 3619 | 4119 | 0019 |
| TS80-PCLNR/L19 | 8019 | 1610 | 5004 | 3619 | 4119 | 0019 |
| | | | | | | |
| TS80-PCLNR/L25 | 8025 | 1612 | 5005 | 3625 | 4125 | 0025 |
| TS100-PCLNR/L25 | 8025 | 1612 | 5005 | 3625 | 4125 | 0025 |

## Enquiry form

If you need any modification from the standard, please submit this enquiry form.

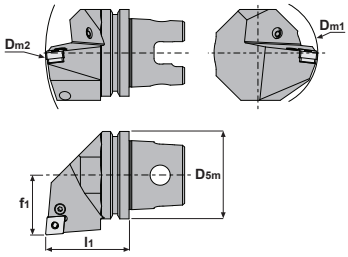


| Dimensions | D5m | Dm2 | f1 | l1 | l2 | y1) | λs2) |
|---|---|---|---|---|---|---|---|
| | | | | | | | |

**Comments:** .....

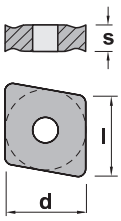


| CN.. | l | s | d |
|---|---|---|---|
| Ref. CN.. 1606.. | 16,10 | 6,35 | 15,88 |
| CN.. 1906.. | 19,30 | 6,35 | 19,05 |
| CN.. 2509.. | 25,80 | 9,52 | 25,40 |

Negative 80° rhombic inserts.

| CNMG-CR | CNMM | | | | | |
|---|---|---|---|---|---|---|
| | | | | | | |

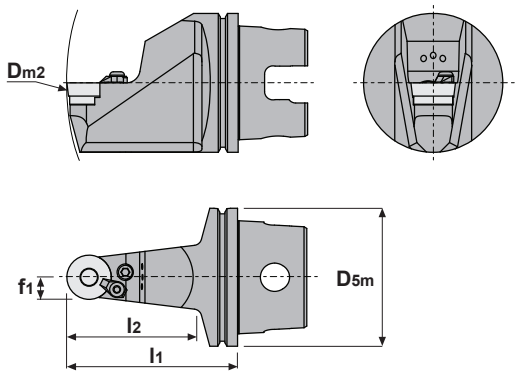


| PRDC | D5m | Dm2 | f1 | l1 | l2 | y1) | λs2) | Insert |
|---|---|---|---|---|---|---|---|---|
| TS100-PRDCN32 | 100 | 300 | 16,0 | 123 | | 0º | 0º | RCMT 3209.. |

1) y= Rake angle (valid a smooth insert).
2) λs= Angle of inclination.

**Characteristics:**
TS with internal coolant.

| | | | | | | | | | |
|---|---|---|---|---|---|---|---|---|---|
| TS100-PRDCN32 | 8132 | 1612 | 5005 | 5004 | 3832 | 4125 | 0025 | 2136 | 1826 |

## Enquiry form

If you need any modification from the standard, please submit this enquiry form.

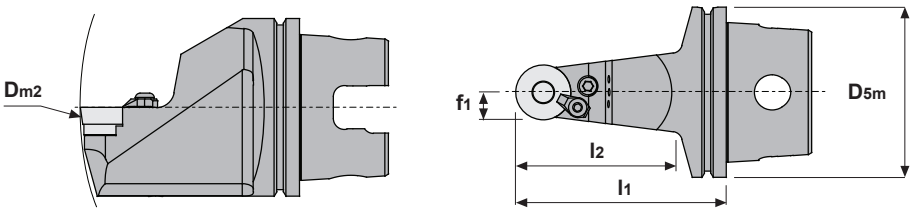


| Dimensions | D5m | Dm2 | f1 | l1 | l2 | y1) | λs2) |
|---|---|---|---|---|---|---|---|
| | | | | | | | |

**Comments:** .....

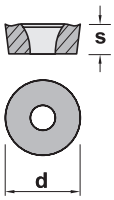


| RCMT | s | d |
|---|---|---|
| Ref. RCMT 3209.. | 9,52 | 32,00 |

Positive 7° clearance - Round insert.

| RCMT | | | | | | |
|---|---|---|---|---|---|---|
| | | | | | | |

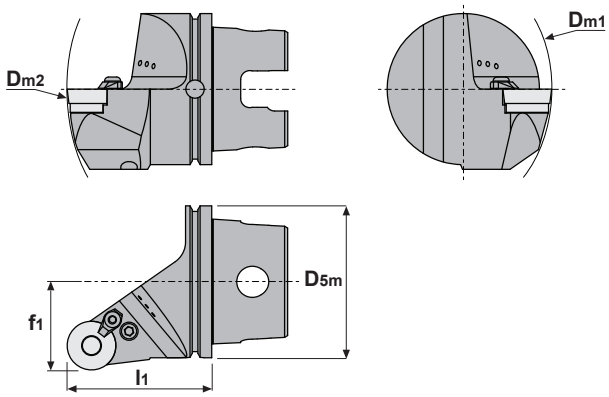


| PRGC | D5m | Dm1 | Dm2 | f1 | l1 | y1) | λs2) | Insert |
|---|---|---|---|---|---|---|---|---|
| TS100-PRGCR/L32 | 100 | 200 | 260 | 58,0 | 95 | 0º | 0º | RCMT 3209.. |

1) y= Rake angle (valid a smooth insert)
2) λs= Angle of inclination.

**Characteristics:**
TS with internal coolant.

| | | | | | | | | | |
|---|---|---|---|---|---|---|---|---|---|
| TS100-PRGCR/L32 | 8132 | 1612 | 5005 | 5004 | 3832 | 4125 | 0025 | 2136 | 1826 |

## Enquiry form

If you need any modification from the standard, please submit this enquiry form.

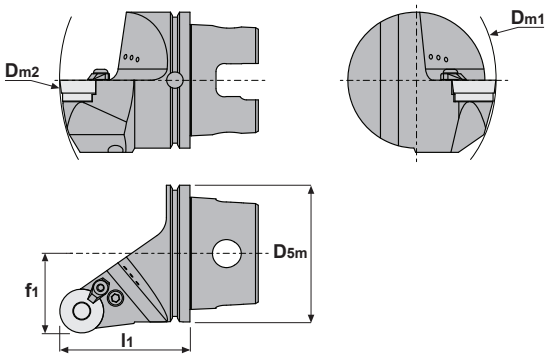


| Dimensions | D5m | Dm1 | Dm2 | f1 | l1 | y1) | λs2) |
|---|---|---|---|---|---|---|---|
| | | | | | | | |

**Comments:** .....

.....

.....

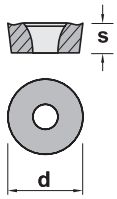


| RCMT | s | d |
|---|---|---|
| Ref. RCMT 3209.. | 9,52 | 32,00 |

Positive 7° clearance - Round insert.

| RCMT | | | | | | |
|---|---|---|---|---|---|---|
| | | | | | | |

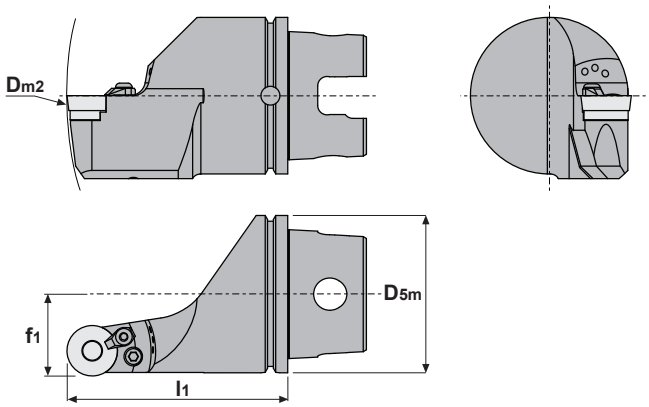


| PRSC | D5m | Dm2 | f1 | l1 | y1) | λs2) | Insert |
|---|---|---|---|---|---|---|---|
| TS100-PRSCR/L32 | 100 | 400 | 52,0 | 140 | 0º | 0º | RCMT 3209.. |

1) y= Rake angle (valid a smooth insert).
2) λs= Angle of inclination.

**Characteristics:**
TS with internal coolant.

| | | | | | | | | | |
|---|---|---|---|---|---|---|---|---|---|
| TS100-PRSCR/L32 | 8132 | 1612 | 5005 | 5004 | 3832 | 4125 | 0025 | 2136 | 1826 |

## Enquiry form

If you need any modification from the standard, please submit this enquiry form.

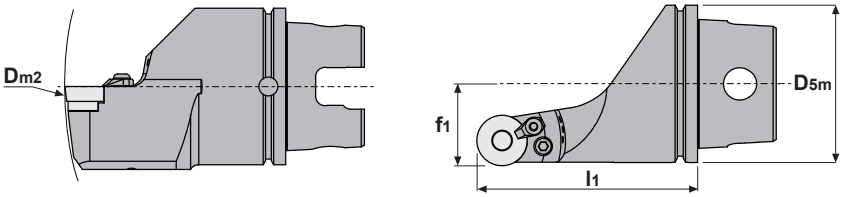


| Dimensions | D5m | Dm2 | f1 | l1 | y1) | λs2) |
|---|---|---|---|---|---|---|
| | | | | | | |

**Comments:** .....

.....

.....

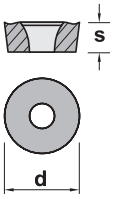


| RCMT | s | d |
|---|---|---|
| Ref. RCMT 3209.. | 9,52 | 32,00 |

Positive 7º clearance - Round insert.

| RCMT | | | | | | |
|---|---|---|---|---|---|---|
| | | | | | | |

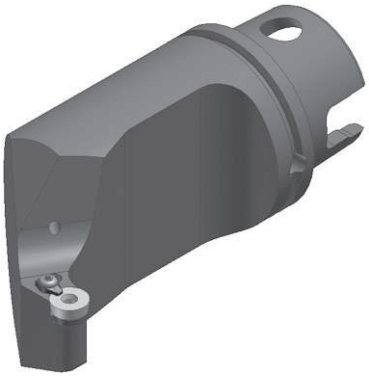

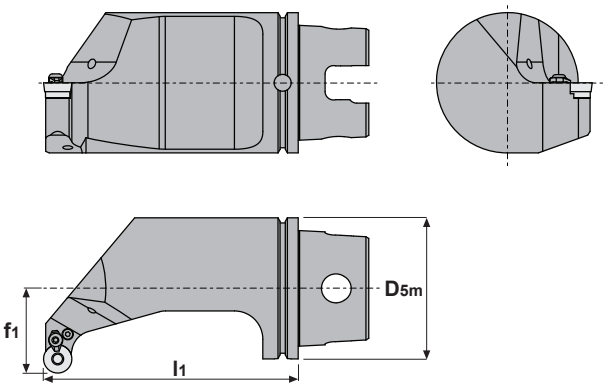


| PRXC | D5m | f1 | l1 | y1) | λs2) | Insert |
|---|---|---|---|---|---|---|
| TS100-PRXCR/L20 | 100 | 60,0 | 180 | 0º | 0º | RCMT 2006.. |

1) y= Rake angle
(valid a smooth insert).
2) λs= Angle of inclination.

**Characteristics:**
TS with internal coolant.

| | | | | | | | | |
|---|---|---|---|---|---|---|---|---|
| TS100-PRXCR/L20 | 8120 | 1708 | 5003 | 3820 | 4115 | 0015 | 2135 | 1825 |

## Enquiry form

If you need any modification from the standard, please submit this enquiry form.

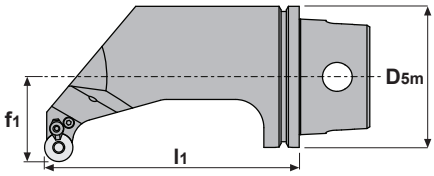


| Dimensions | D5m | f1 | l1 | y1) | λs2) |
|---|---|---|---|---|---|
| | | | | | |

**Comments:** .....

.....

.....

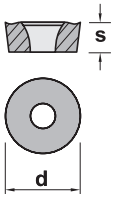


| RCMT | s | d |
|---|---|---|
| Ref. RCMT 2006.. | 6,35 | 20,00 |

Positive 7° clearance - Round insert.

| RCMT | | | | | | |
|---|---|---|---|---|---|---|
| | | | | | | |

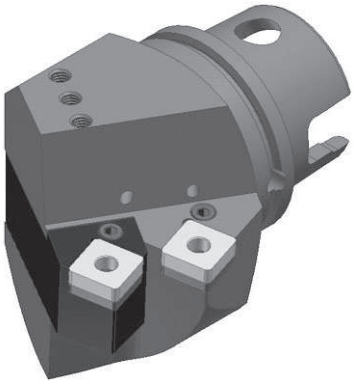

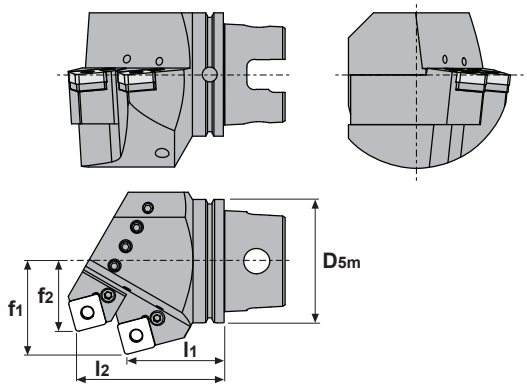


| PSXN | D5m | f1 | f2 | l1 | l2 | Insert |
|---|---|---|---|---|---|---|
| TS100-PSXNR25 | 100 | 70 | 64 | 85 | 130 | SNM.. 2507.. |

**Characteristics:**
TS with internal coolant.

| | | | | | | |
|---|---|---|---|---|---|---|
| TS100-PSXNR25 | 8025 | 1612 | 5005 | 3525 | 4125 | 0025 |

## Enquiry form

If you need any modification from the standard, please submit this enquiry form.

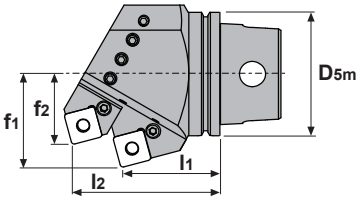


| Dimensions | D5m | f1 | f2 | l1 | l2 |
|---|---|---|---|---|---|
| | | | | | |

**Comments:** .....

.....

.....

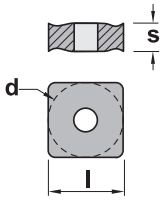


| SNM.. | l | s | d |
|---|---|---|---|
| Ref. SNM.. 2507.. | 25,40 | 7,94 | 25,40 |

Negative square inserts.

| SNMG-CR | SNMM | | | | | |
|---|---|---|---|---|---|---|
| | | | | | | |

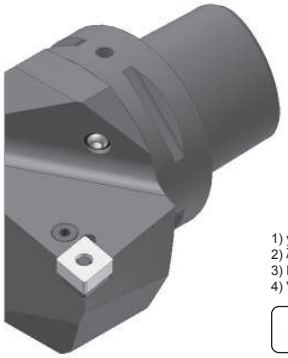

1) y= Rake angle (valid a smooth insert).
2) λs= Angle of inclination.
3) Nm= Insert moment of force.
4) Valid in combination with the fixing unit R/LC2090.

**Characteristics:**
PSC with internal coolant.

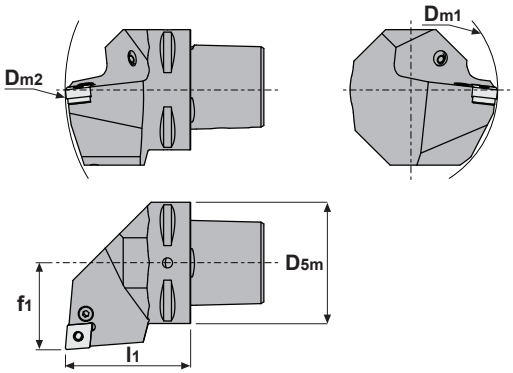


| PCLN | $D_{5m}$ | $D_{m1}$ min.4) | $D_{m2}$ min.4) | $f_1$ | $l_1$ | y1) | λs2) | Nm3) | Insert |
|---|---|---|---|---|---|---|---|---|---|
| PSC63-PCLNR/L45065-16 | 63 | 125 | 190 | 45 | 65 | -6º | -6º | 6.4 | CN.. 1606.. |
| PSC80-PCLNR/L55080-16 | 80 | 125 | 250 | 55 | 80 | -6º | -6º | 6.4 | CN.. 1606.. |
| | | | | | | | | | |
| PSC63-PCLNR/L45065-19 | 63 | 125 | 190 | 45 | 65 | -6º | -6º | 6.4 | CN.. 1906.. |
| PSC80-PCLNR/L55080-19 | 80 | 125 | 250 | 55 | 80 | -6º | -6º | 6.4 | CN.. 1906.. |
| | | | | | | | | | |
| PSC80-PCLNR/L55080-25 | 80 | 150 | 250 | 55 | 80 | -6º | -6º | 9.5 | CN.. 2509.. |
| PSC100-PCLNR/L70100-25 | 100 | 175 | 250 | 70 | 100 | -6º | -6º | 9.5 | CN.. 2509.. |

| | | | | | | |
|---|---|---|---|---|---|---|
| PSC63-PCLNR/L45065-16 | 8016 | 1618 | 5003 | 3616 | 4115 | 0015 |
| PSC80-PCLNR/L55080-16 | 8016 | 1618 | 5003 | 3616 | 4115 | 0015 |
| | | | | | | |
| PSC63-PCLNR/L45065-19 | 8019 | 1610 | 5004 | 3619 | 4119 | 0019 |
| PSC80-PCLNR/L55080-19 | 8019 | 1610 | 5004 | 3619 | 4119 | 0019 |
| | | | | | | |
| PSC80-PCLNR/L55080-25 | 8025 | 1612 | 5005 | 3625 | 4125 | 0025 |
| PSC100-PCLNR/L70100-25 | 8025 | 1612 | 5005 | 3625 | 4125 | 0025 |

## Enquiry form

If you need any modification from the standard, please submit this enquiry form.

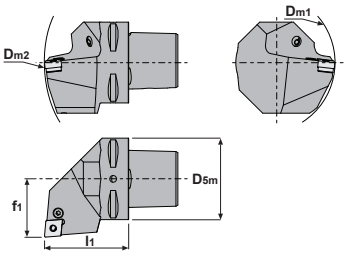


| Dimensions | $D_{5m}$ | $D_{m2}$ | $f_1$ | $l_1$ | $l_2$ | y1) | λs2) |
|---|---|---|---|---|---|---|---|
| | | | | | | | |

**Comments:** .....

.....

.....

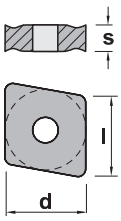


| CN.. | l | s | d |
|---|---|---|---|
| Ref. CN.. 1606.. | 16,10 | 6,35 | 15,88 |
| CN.. 1906.. | 19,30 | 6,35 | 19,05 |
| CN.. 2509.. | 25,80 | 9,52 | 25,40 |

Negative 80° rhombic inserts.

| CNMG-CR | CNMM | | | | | |
|---|---|---|---|---|---|---|
| | | | | | | |

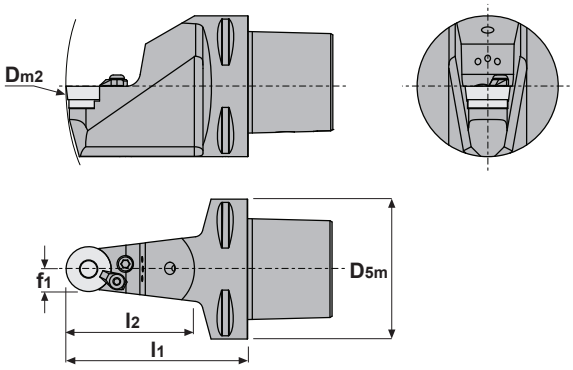


| PRDC | D5m | Dm2 | f1 | l1 | l2 | y1) | λs2) | Insert |
|---|---|---|---|---|---|---|---|---|
| PSC63-PRDCN00065-25 | 63 | 190 | 12,5 | 65 | | 0º | 0º | RCMT 2507.. |
| PSC80-PRDCN00080-25 | 80 | 250 | 12,5 | 80 | | 0º | 0º | RCMT 2507.. |
| PSC80-PRDCN00080-32 | 80 | 250 | 16,0 | 80 | | 0º | 0º | RCMT 3209.. |
| PSC100-PRDCN00129-32 | 100 | 300 | 16,0 | 129 | | 0º | 0º | RCMT 3209.. |

1) y= Rake angle (valid a smooth insert).
2) λs= Angle of inclination.

**Characteristics:**
PSC with internal coolant.

| | | | | | | | | | |
|---|---|---|---|---|---|---|---|---|---|
| PSC63-PRDCN00065-25 | 8125 | 1710 | 5004 | - | 3825 | 4119 | 0019 | 2136 | 1826 |
| PSC80-PRDCN00080-25 | 8125 | 1710 | 5004 | - | 3825 | 4119 | 0019 | 2136 | 1826 |
| PSC80-PRDCN00080-32 | 8132 | 1612 | 5005 | 5004 | 3832 | 4125 | 0025 | 2136 | 1826 |
| PSC100-PRDCN00129-32 | 8132 | 1612 | 5005 | 5004 | 3832 | 4125 | 0025 | 2136 | 1826 |

## Enquiry form

If you need any modification from the standard, please submit this enquiry form.

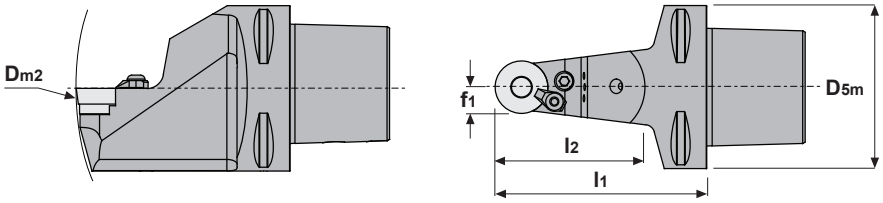


| Dimensions | D5m | Dm2 | f1 | l1 | l2 | y1) | λs2) |
|---|---|---|---|---|---|---|---|
| | | | | | | | |

**Comments:** .....

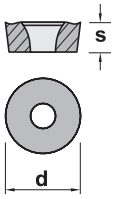


| RCMT | s | d |
|---|---|---|
| Ref. RCMT 2507.. | 7,94 | 25,00 |
| RCMT 3209.. | 9,52 | 32,00 |

Positive 7° clearance - Round insert.

| RCMT | | | | | | |
|---|---|---|---|---|---|---|
| | | | | | | |

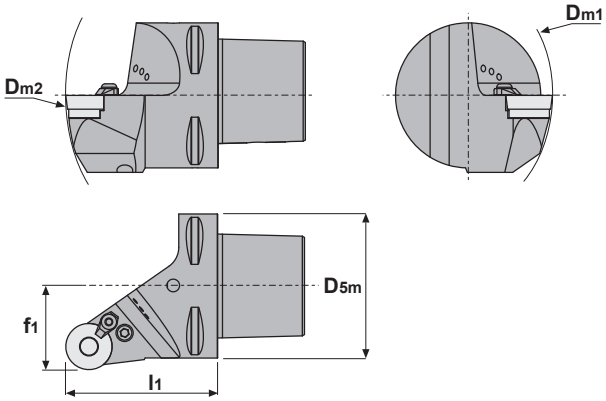


| PRGC | D5m | Dm1 | Dm2 | f1 | l1 | y1) | λs2) | Insert |
|---|---|---|---|---|---|---|---|---|
| PSC100-PRGCR/L58105-32 | 100 | 200 | 260 | 58,0 | 105 | 0º | 0º | RCMT 3209.. |

1) y= Rake angle (valid a smooth insert).
2) λs= Angle of inclination.

**Characteristics:**
PSC with internal coolant.

| | | | | | | | | | |
|---|---|---|---|---|---|---|---|---|---|
| PSC100-PRGCR/L58105-32 | 8132 | 1612 | 5005 | 5004 | 3832 | 4125 | 0025 | 2136 | 1826 |

## Enquiry form

If you need any modification from the standard, please submit this enquiry form.

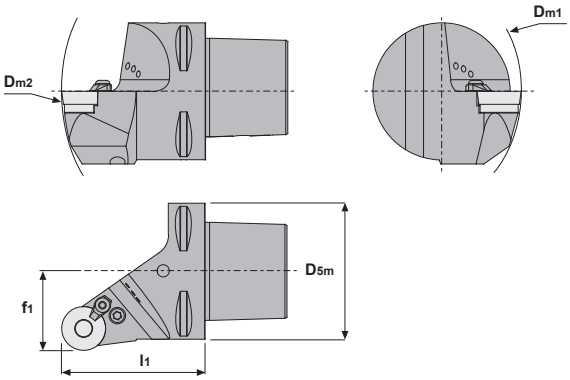


| Dimensions | D5m | Dm1 | Dm2 | f1 | l1 | y1) | λs2) |
|---|---|---|---|---|---|---|---|
| | | | | | | | |

**Comments:** .....

.....

.....

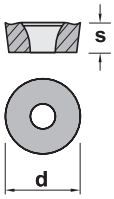


| RCMT | s | d |
|---|---|---|
| Ref. RCMT 3209.. | 9,52 | 32,00 |

Positive 7° clearance - Round insert.

| RCMT | | | | | | |
|---|---|---|---|---|---|---|
| | | | | | | |

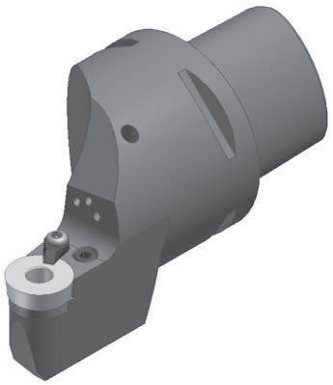

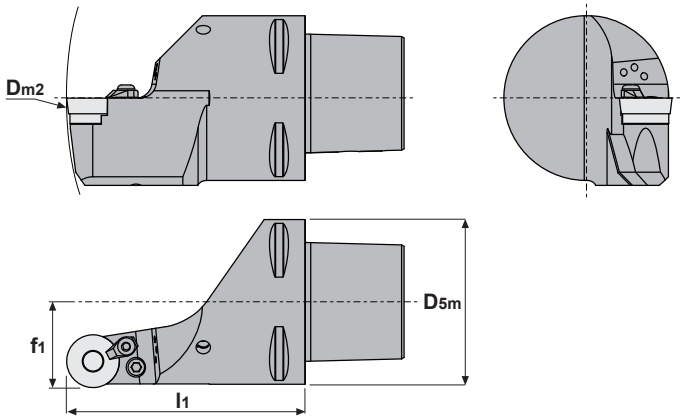


| PRSC | D5m | Dm2 | f1 | l1 | y1) | λs2) | Insert |
|---|---|---|---|---|---|---|---|
| PSC100-PRSCR/L52145-32 | 100 | 400 | 52,0 | 145 | 0º | 0º | RCMT 3209.. |

1) y= Rake angle (valid a smooth insert).
2) λs= Angle of inclination.

**Characteristics:**
PSC with internal coolant.

| | | | | | | | | | |
|---|---|---|---|---|---|---|---|---|---|
| PSC100-PRSCR/L52145-32 | 8132 | 1612 | 5005 | 5004 | 3832 | 4125 | 0025 | 2136 | 1826 |

## Enquiry form

If you need any modification from the standard, please submit this enquiry form.

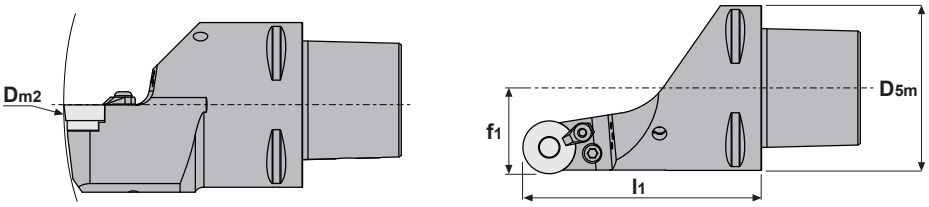


| Dimensions | D5m | Dm2 | f1 | l1 | y1) | λs2) |
|---|---|---|---|---|---|---|
| | | | | | | |

**Comments:** .....

| RCMT | s | d |
|---|---|---|
| Ref. RCMT 3209.. | 9,52 | 32,00 |

Positive 7° clearance - Round insert.

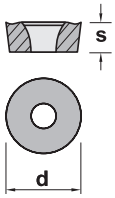


| RCMT | | | | | | |
|---|---|---|---|---|---|---|
| | | | | | | |

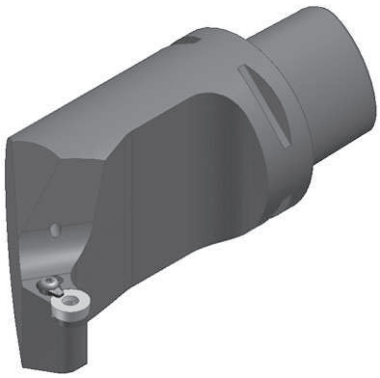

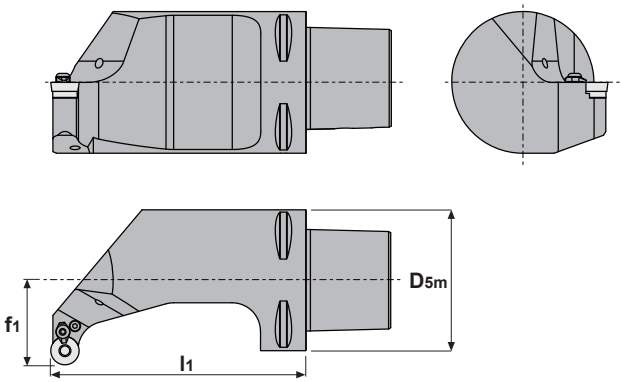


| PRXC | D5m | f1 | l1 | y1) | λs2) | Insert |
|---|---|---|---|---|---|---|
| PSC100-PRXCR/L60180-20 | 100 | 60,0 | 180 | 0º | 0º | RCMT 2006.. |

1) y= Rake angle
(valid a smooth insert).
2) λs= Angle of inclination.

**Characteristics:**
PSC with internal coolant.

| | | | | | | | | |
|---|---|---|---|---|---|---|---|---|
| PSC100-PRXCR/L60180-20 | 8120 | 1708 | 5003 | 3820 | 4115 | 0015 | 2135 | 1825 |

## Enquiry form

If you need any modification from the standard, please submit this enquiry form.

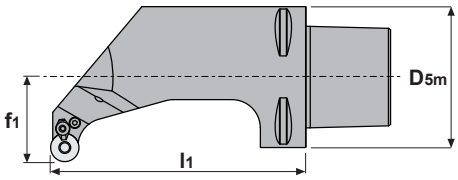


| Dimensions | D5m | f1 | l1 | y1) | λs2) |
|---|---|---|---|---|---|
| | | | | | |

**Comments:** .....

.....

.....

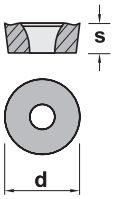


| RCMT | s | d |
|---|---|---|
| Ref. RCMT 2006.. | 6,35 | 20,00 |

Positive 7° clearance - Round insert.

| RCMT | | | | | | |
|---|---|---|---|---|---|---|
| | | | | | | |

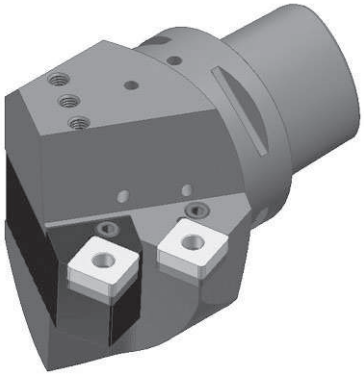

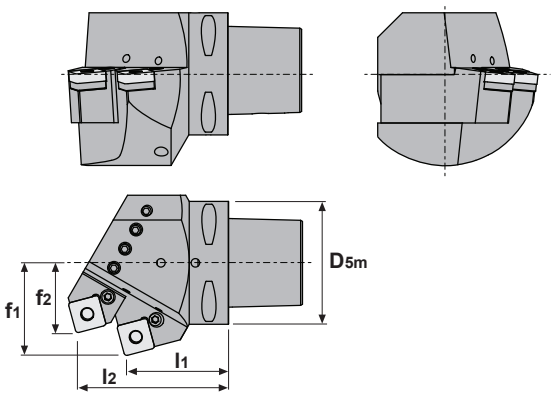


| PSXN | D5m | f1 | f2 | l1 | l2 | Insert |
|---|---|---|---|---|---|---|
| PSC100-PSXNR70085-25 | 100 | 70 | 64 | 85 | 130 | SNM.. 2507.. |

**Characteristics:**
PSC with internal coolant.

| | | | | | | |
|---|---|---|---|---|---|---|
| PSC100-PSXNR70085-25 | 8025 | 1612 | 5005 | 3525 | 4125 | 0025 |

## Enquiry form

If you need any modification from the standard, please submit this enquiry form.

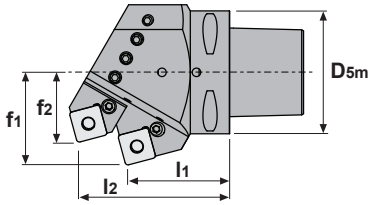


| Dimensions | D5m | f1 | f2 | l1 | l2 |
|---|---|---|---|---|---|
| | | | | | |

**Comments:** .....

.....

.....

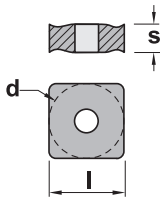


| SNM.. | l | s | d |
|---|---|---|---|
| Ref. SNM.. 2507.. | 25,40 | 7,94 | 25,40 |

Negative square inserts.

| SNMG-CR | SNMM | | | | | |
|---|---|---|---|---|---|---|
| | | | | | | |

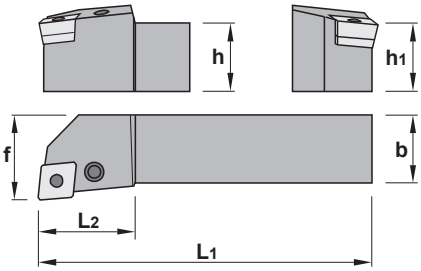


| PCLN | h=h1 | b | L1 | L2 | f | Insert |
|---|---|---|---|---|---|---|
| PCLN R/L 4040 S16 | 40 | 40 | 250 | 34 | 50 | CN.. 1606.. |
| PCLN R/L 4040 S19 | 40 | 40 | 250 | 45 | 50 | CN.. 1906.. |
| | | | | | | CN.. 1906.. |
| PCLN R/L 4040 S25 | 40 | 40 | 250 | 45 | 50 | |
| PCLN R/L 5050 T25 | 50 | 50 | 300 | 45 | 60 | CN.. 2509.. |

| | | | | | | |
|---|---|---|---|---|---|---|
| PCLN R/L 4040 S16 | 8016 | 1618 | 5003 | 3616 | 4115 | 0015 |
| PCLN R/L 4040 S19 | 8019 | 1610 | 5004 | 3619 | 4119 | 0019 |
| PCLN R/L 4040 S25 | 8025 | 1612 | 5005 | 3625 | 4125 | 0025 |
| PCLN R/L 5050 T25 | 8025 | 1612 | 5005 | 3625 | 4125 | 0025 |

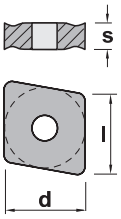


| Ref. | CN.. | l | s | d |
|---|---|---|---|---|
| | CN.. 1606.. | 16,10 | 6,35 | 15,88 |
| | CN.. 1906.. | 19,30 | 6,35 | 19,05 |
| | CN.. 2509.. | 25,80 | 9,52 | 25,40 |

Negative 80° rhombic inserts.

| CNMG-CR | CNMM | | | | | |
|---|---|---|---|---|---|---|
| | | | | | | |

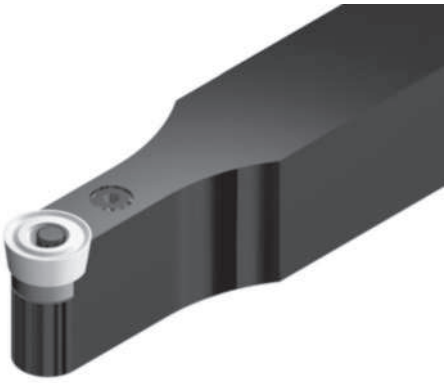

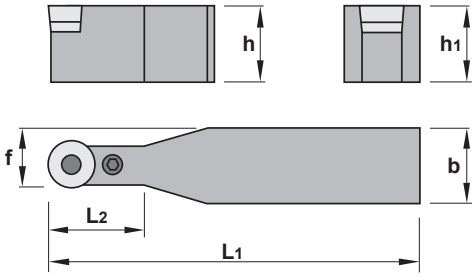


| PRDC | h=h1 | b | L1 | L2 | f | Insert |
|---|---|---|---|---|---|---|
| **PRDC N 4040 S20** | 40 | 40 | 250 | 42 | 30,0 | RCMT 2006.. |
| | | | | | | |
| **PRDC N 4040 S25** | 40 | 40 | 250 | 45 | 32,5 | RCMT 2507.. |
| **PRDC N 4040 U25** | 40 | 40 | 350 | 45 | 32,5 | RCMT 2507.. |
| **PRDC N 5050 U25** | 50 | 50 | 350 | 45 | 37,5 | RCMT 2507.. |
| | | | | | | |
| **PRDC N 5050 V32** | 50 | 50 | 400 | 52 | 41,0 | RCMT 3209.. |

| | | | | | | |
|---|---|---|---|---|---|---|
| **PRDC N 4040 S20** | 8120 | 1708 | 5003 | 3820 | 4115 | 0015 |
| | | | | | | |
| **PRDC N 4040 S25** | 8125 | 1710 | 5004 | 3825 | 4119 | 0019 |
| **PRDC N 4040 U25** | 8125 | 1710 | 5004 | 3825 | 4119 | 0019 |
| **PRDC N 5050 U25** | 8125 | 1710 | 5004 | 3825 | 4119 | 0019 |
| | | | | | | |
| **PRDC N 5050 V32** | 8132 | 1612 | 5005 | 3832 | 4125 | 0025 |

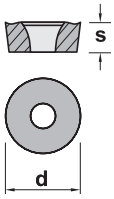


| RCMT | s | d |
|---|---|---|
| Ref. **RCMT 2006..** | 6,35 | 20,00 |
| **RCMT 2507..** | 7,94 | 25,00 |
| **RCMT 3209..** | 9,52 | 32,00 |

Positive 7° clearance - Round insert.

| RCMT | | | | | | |
|---|---|---|---|---|---|---|
| | | | | | | |

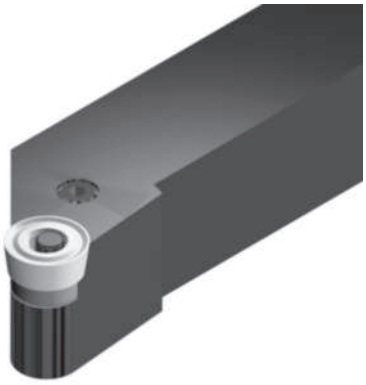

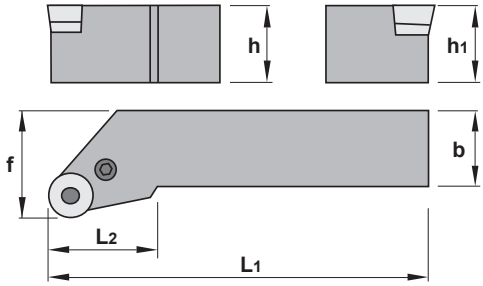


| PRSC | h=h1 | b | L1 | L2 | f | Insert |
|---|---|---|---|---|---|---|
| PRSC R/L 4040 S20 | 40 | 40 | 250 | 42 | 50 | RCMT 2006.. |
| PRSC R/L 4040 S25 | 40 | 40 | 250 | 45 | 50 | RCMT 2507.. |
| PRSC R/L 5050 T32 | 50 | 50 | 300 | 45 | 63 | RCMT 3209.. |

| | | | | | | |
|---|---|---|---|---|---|---|
| PRSC R/L 4040 S20 | 8120 | 1708 | 5003 | 3820 | 4115 | 0015 |
| PRSC R/L 4040 S25 | 8125 | 1710 | 5004 | 3825 | 4119 | 0019 |
| PRSC R/L 5050 T32 | 8132 | 1612 | 5005 | 3832 | 4125 | 0025 |

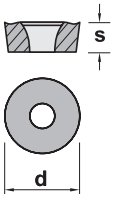


| Ref. | RCMT | s | d |
|---|---|---|---|
| | RCMT 2006.. | 6,35 | 20,00 |
| | RCMT 2507.. | 7,94 | 25,00 |
| | RCMT 3209.. | 9,52 | 32,00 |

Positive 7° clearance - Round insert.

| RCMT | | | | | | |
|---|---|---|---|---|---|---|
| | | | | | | |

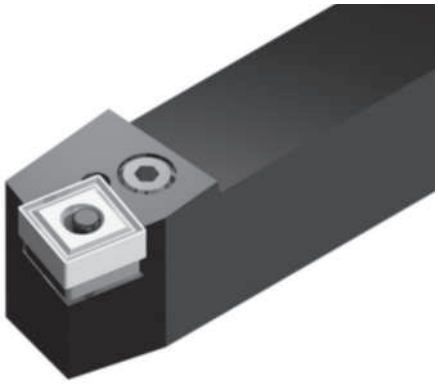

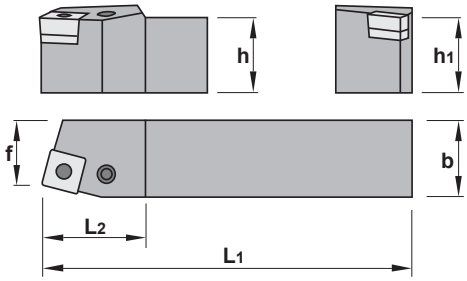


| PSBN | h=h1 | b | L1 | L2 | f | Insert |
|---|---|---|---|---|---|---|
| **PSBN R/L 4040 S19** | 40 | 40 | 250 | 45 | 35 | SNM.. 1906.. |
| | | | | | | |
| **PSBN R/L 4040 S25** | 40 | 40 | 250 | 45 | 35 | SNM.. 2507.. |
| **PSBN R/L 5050 T25** | 50 | 50 | 300 | 45 | 43 | SNM.. 2507.. |

| | | | | | | |
|---|---|---|---|---|---|---|
| **PSBN R/L 4040 S19** | 8019 | 1610 | 5004 | 3519 | 4119 | 0019 |
| | | | | | | |
| **PSBN R/L 4040 S25** | 8025 | 1612 | 5005 | 3525 | 4125 | 0025 |
| **PSBN R/L 5050 T25** | 8025 | 1612 | 5005 | 3525 | 4125 | 0025 |

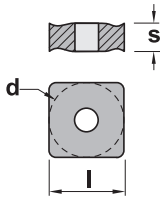


| Ref. | SNM.. | l | s | d |
|---|---|---|---|---|
| | **SNM.. 1906..** | 19,05 | 6,35 | 19,05 |
| | **SNM.. 2507..** | 25,40 | 7,94 | 25,40 |

Negative square inserts.

| SNMA | SNMG-CR | SNMM | | | | |
|---|---|---|---|---|---|---|
| | | | | | | |

# RE-TURNING

RE-TURNING
RE-TURNING

| Example of re-turning with LNUX 30 19 40 - 6R NL40 | |
|---|---|
| **Cutting depth** | $a_p$ = 5-12 mm (.197-.472 inch) |
| **Feed** | $f_r$ = 1,5 mm/rev (.059 inch/rev) |
| **Speed** | $v_c$ = 50 m/min (165 ft/min) |

| Machine Type | Cutting Speed | | | | Feed $f_r$ | |
|---|---|---|---|---|---|---|
| | m/min | | ft/min | | | |
| | vc1 | vc2 | vc1 | vc2 | mm/rev | inch/rev |
| **Under-floor Lathe1)** | 50,0 | 90,5 | 165 | 297 | 0,3-1,5 | .012-.059 |
| **Portal Lathe** | 50,0 | 90,5 | 165 | 297 | 0,51-1,80 | .020-.071 |
| **Universal Lathe2)** | 40,5 | 71,6 | 133 | 235 | 0,51-1,80 | .020-.071 |

1) Restricted by power supply and friction drive installed.
2) Restricted by power supply installed.

Recommended values in vc1 table are to be used when machining the tread (section A in diagram). Higher speed and feed values from table section vc2 are to be used for flange copying (section B and C).

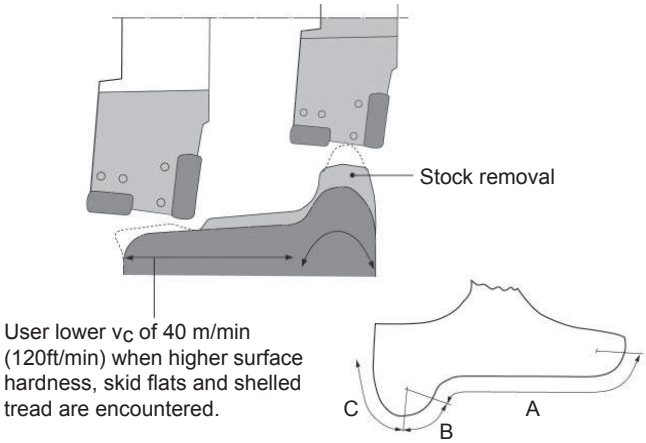


Application performance is dependant on many factors such as cutting speed, lead angle and work piece material quality and condition.

The adjacent diagram offers “general rule” recommendations for speed and feed rates that should be followed for best performance on referenced types of machine tools.

Tabulated cutting data is recommended for machining usual railway wheel materials with Canela T22, SF30, NL30 or NL grades.

When skid flats, built-up tread, shelled tread conditions are extreme the lower cutting speeds are recommended. Lower cutting speeds (vc1) are also recommended if wheels being returned are of a higher carbon content. Modifications to recommended feed rates should de kept to a minimum.

Table data is valid when turning the tread (Section A of the diagram). Flange copying operations are made at higher cutting speeds (vc2) and feeds (Sections B & C of the diagram).

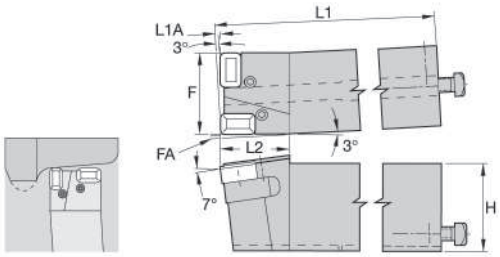


Tread Profile Turning

| HUWTC | H | F | $L_1$ | $L_2$ | FA | $L_1A$ | Insert |
|---|---|---|---|---|---|---|---|
| HUWTCR/L | 80 | 76,20 | 275 | 63,50 | 3,00 | 3,00 | 2 x RRC.. |

| | | | | | |
|---|---|---|---|---|---|
| HUWTCR | SU6 SU8 | S1006PKG | S751 | S1033 | S1014 |
| HUWTCL | SU7 SU8 | S1006PKG | S751 | S1033 | S1014 |

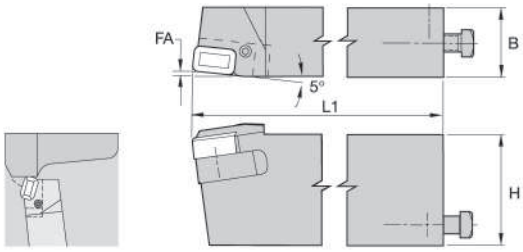


Flange Topping

| HUWFT | H | F | $L_1$ | FA | Insert |
|---|---|---|---|---|---|
| HUWFTR/L | 80 | 50 | 265 | 3,53 | RRC.. |

| | | | | | |
|---|---|---|---|---|---|
| HUWFTR | SU6 | S1006PKG | S1015 | S1033 | S1014 |
| HUWFTL | SU7 | S1006PKG | S1015 | S1033 | S1014 |

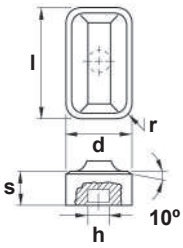


| Ref. | RRC.. | l | s | d | r | h |
|---|---|---|---|---|---|---|
| | RRC-65612R | 31,75 | 9,52 | 19,05 | 4,75 | - |
| | RRC-65612T | 31,75 | 9,53 | 19,05 | 4,75 | - |
| | RRCH65812-T15 | 31,75 | 12,70 | 19,05 | 4,75 | 8,25 |

| RRC-65612R | RRC-65612T | RRCH65812-T15 | | |
|---|---|---|---|---|
| | | | | |
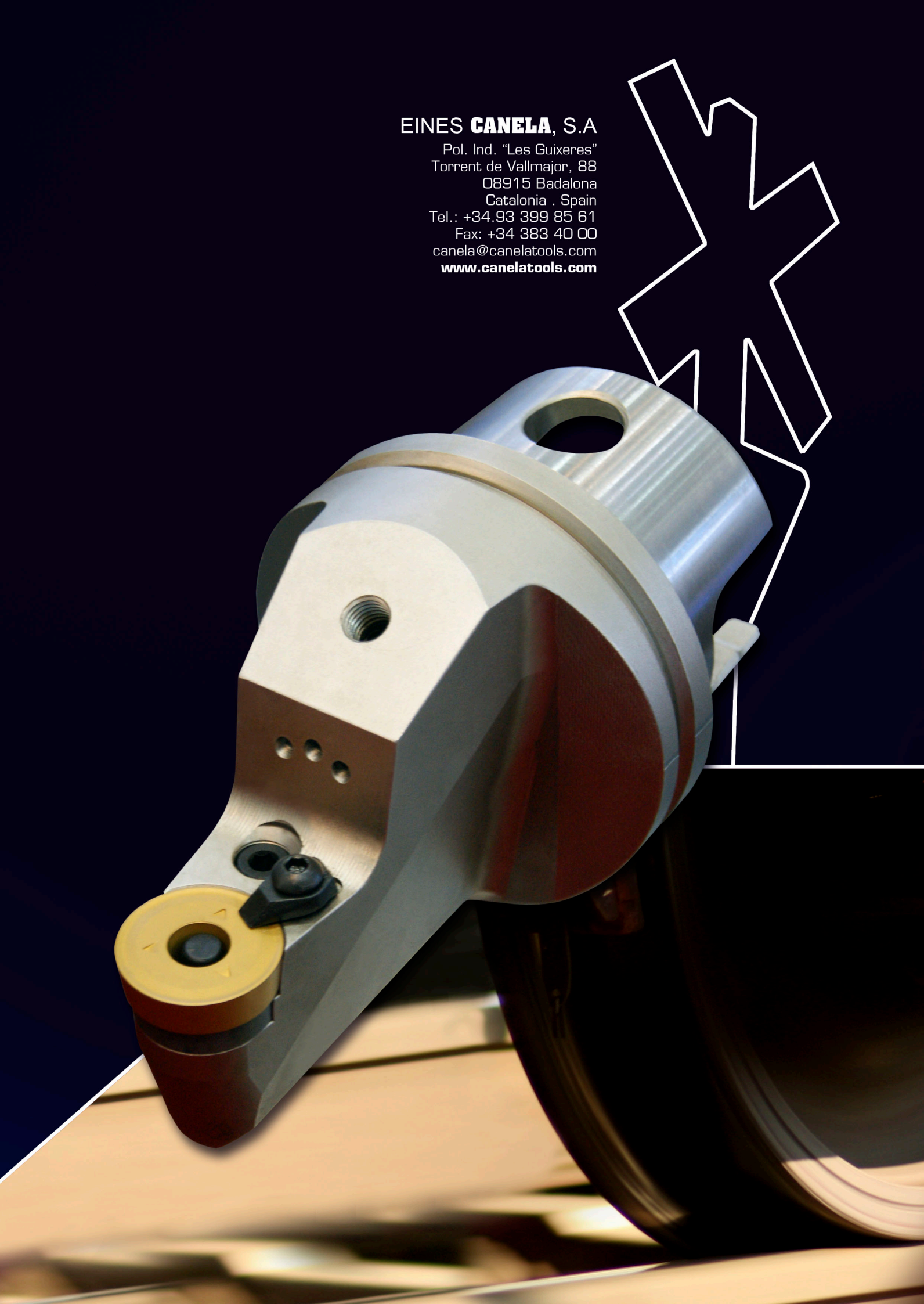
EINES **CANELA**, S.A
Pol. Ind. "Les Guixeres"
Torrent de Vallmajor, 88
08915 Badalona
Catalonia . Spain
Tel.: +34.93 399 85 61
Fax: +34 383 40 00
canela@canelatools.com
**www.canelatools.com**